Hundai 4Cyl 2Coil 5V Hall

Harness Required: E17 Ver 1.0 & E04 Ver 1.0
Last Changed: 18/04/2009
Drawing Ver: 1.0

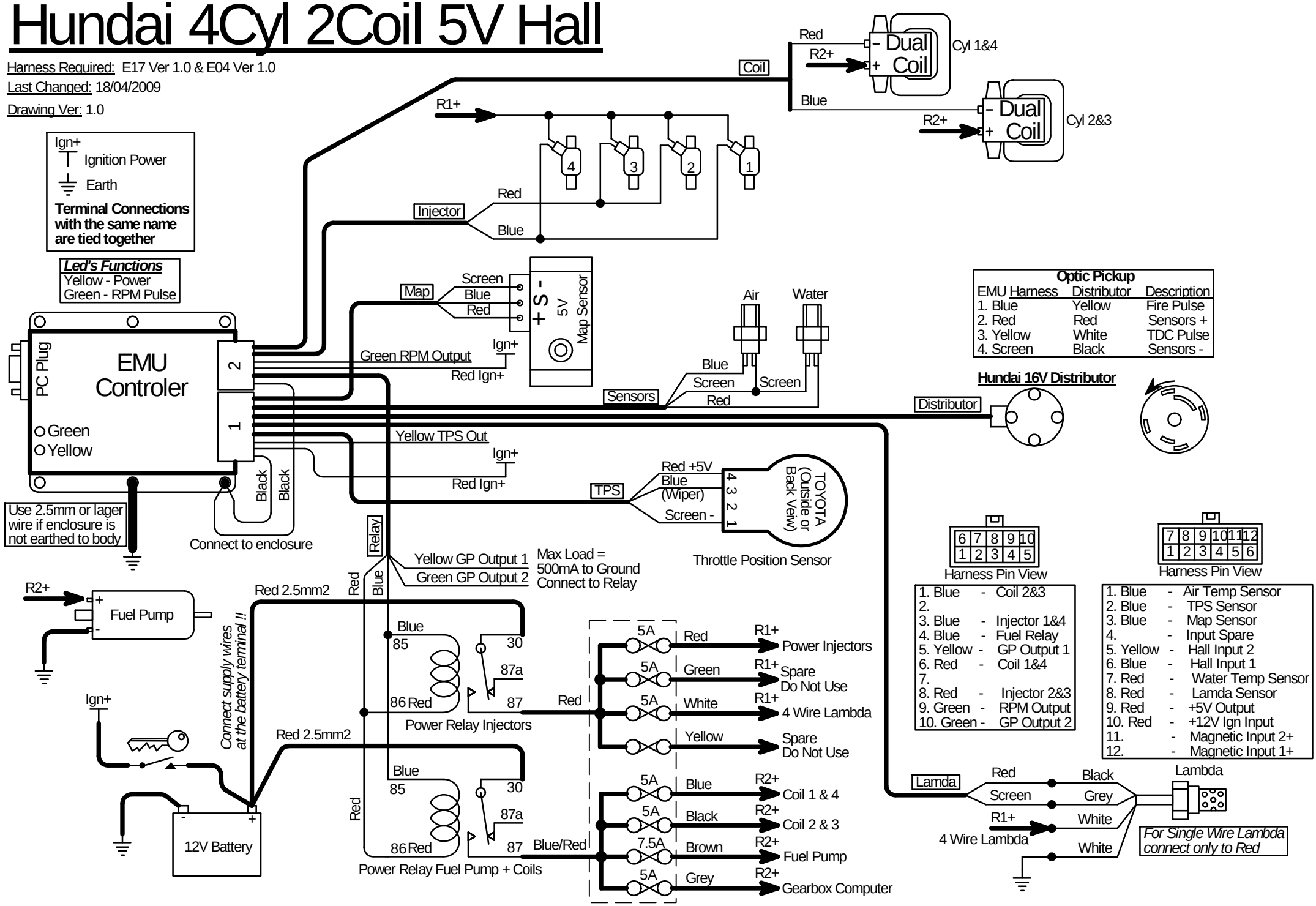

Optic Pickup

EMU Harness	Distributor	Description
1. Blue	Yellow	Fire Pulse
2. Red	Red	Sensors +
3. Yellow	White	TDC Pulse
4. Screen	Black	Sensors -

1. Blue	-	Coil 2&3
2.		
3. Blue	-	Injector 1&4
4. Blue	-	Fuel Relay
5. Yellow	-	GP Output 1
6. Red	-	Coil 1&4
7.		
8. Red	-	Injector 2&3
9. Green	-	RPM Output
10. Green	-	GP Output 2

1. Blue	-	Air Temp Sensor
2. Blue	-	TPS Sensor
3. Blue	-	Map Sensor
4.	-	Input Spare
5. Yellow	-	Hall Input 2
6. Blue	-	Hall Input 1
7. Red	-	Water Temp Sensor
8. Red	-	Lamda Sensor
9. Red	-	+5V Output
10. Red	-	+12V Ign Input
11.	-	Magnetic Input 2+
12.	-	Magnetic Input 1+